FILE:			
REV	CONTENT	CHK	DATE
V0.0	CONTENT	CXL	14.12.03

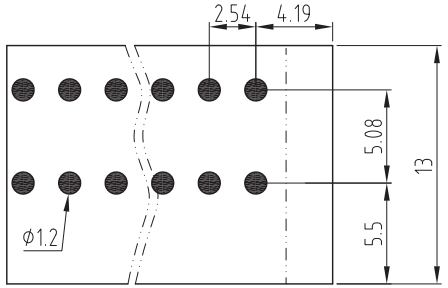

● FOR PIN P.C.B LAYOUT

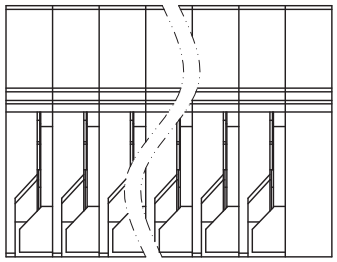

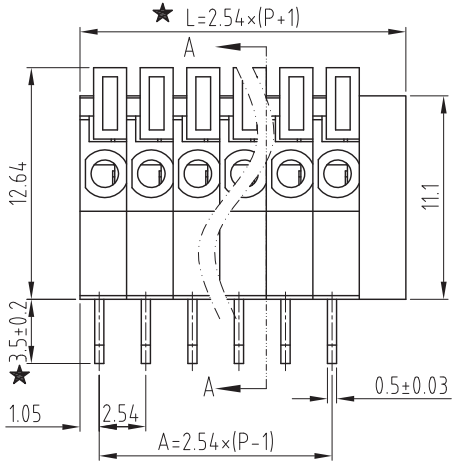

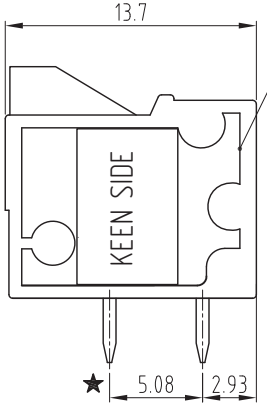

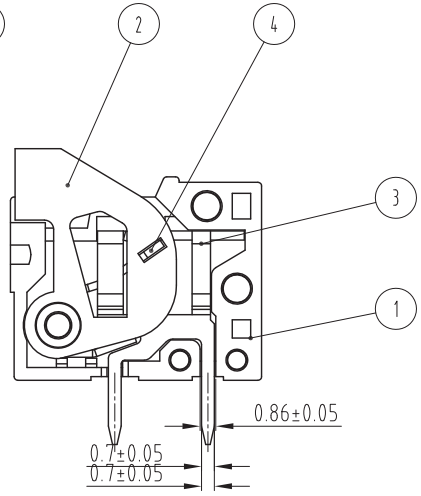

SECTION A-A

NOTES:

1.Rating:150V 2A,
2.Insulation Withstands Voltage: AC1300V/MIN;
3.Insulation Resistance: 500M Ω or more at DC500V
4.Using Temperature Range: -40°C/+105°C
5.Suitable Electric Wire: 20-26 AWG
6." ★ "The importmant dimension.

DIM \ P	2	3	4	5	6	7	8	9	10	11	12	13	14	15
L	7.62	10.16	12.7	15.24	17.78	20.32	22.86	25.4	27.94	30.48	33.02	35.56	38.1	40.64
A	2.54	5.08	7.62	10.16	12.7	15.24	17.78	20.32	22.86	25.4	27.94	30.48	33.02	35.56

DIM \ P	16	17	18	19	20	21	22	23	24	25	26	27	28	29	30
L	43.18	45.72	48.26	50.8	53.34	55.88	58.42	60.96	63.5	66.04	68.58	71.12	73.66	76.2	78.74
A	38.1	40.64	43.18	45.72	48.26	50.8	53.34	55.88	58.42	60.96	63.5	66.04	68.58	71.12	73.66

Total Pitch Tolerances in mm									Nominal dimension range in mm									⊥		≐	—	//	
over 0 to 30	over 30 to 53	over 53 to 70	over 70 to 90	over 90 to 115	over 115 to 150	over 150 to 250	over 250 to 350	over 350 to 500	over 0 to 30	over 30 to 53	over 53 to 70	over 70 to 90	over 90 to 115	over 115 to 150	over 150 to 200	over 200 to 250	over 250 to 320	over 0 to 10	over 10	all	over 0 to 100	over 100 to 150	over 150
±0.18	±0.20	±0.25	±0.3	±0.35	±0.44	±0.60	±0.70	±0.85	±0.20	±0.25	±0.30	±0.35	±0.44	±0.55	±0.70	±0.80	±0.90	0.2	0.3	0.3	0.2	0.3	0.5

5				1	PA66(V0)		
4				P	STAINLESS		
3				P	BRASS	Sn Plated	
2				P	POM(V2)		
1				P	PA66(V0)		
ITEM	NAME OF PART		NO. OF PART	Q"TY	MATERIAL		NOTE
DWG.	CXL	DATE	14.12.03	SIZE	A4	UNITS mm	SHEET/OF 1 / 1
CHK.		DATE		SCALE	1:1		
APP.		DATE		NAME	KSE-141R-2.54-XX		
KEEN SIDE			KEEN SIDE electronics	DWGNO.			

REV:1.0