| FILE: | REV | CONTENT | CHK | DATE |
|---|---|---|---|---|

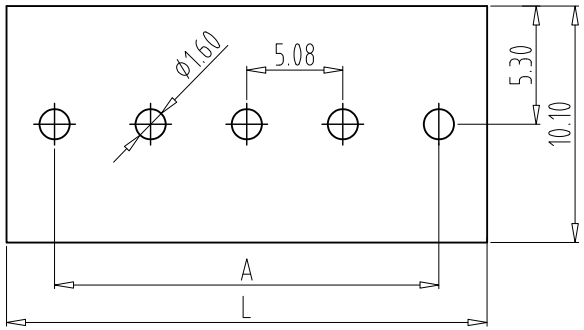


PCB LAYOUT

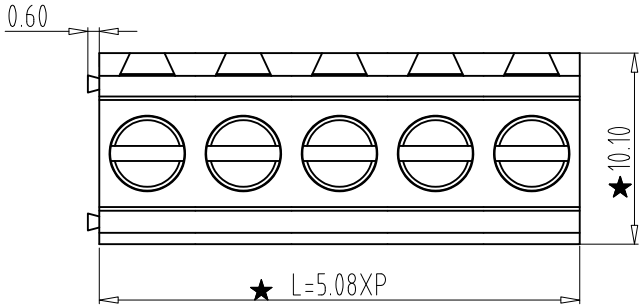


**NOTES:**

1. Rating:300V 10A;
2. Insulation Withstands Voltage: AC2000V/MIN;
3. Insulation Resistance: 500MΩ or more at DC500V
4. Using Temperature Range: -40°C/+105°C;
5. Screw Torque Vlaue:0.4N.m;
6. Suitable Electric Wire: 12-24AWG .
7. "★ " is critical dimension to be controlled.

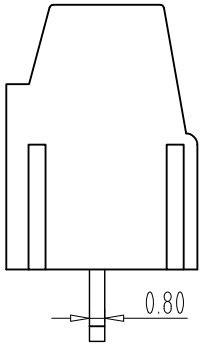


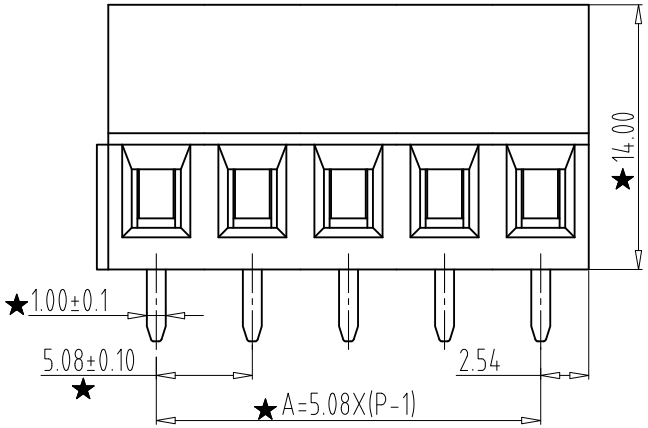


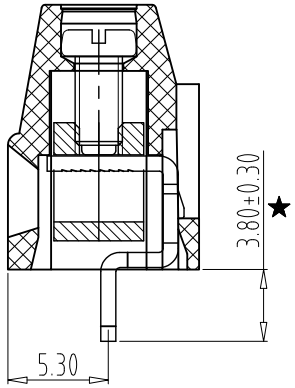


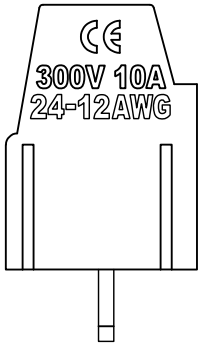


| Total Pitch Tolerances in mm | | | | | | | | | Nominal dimension range in mm | | | | | | | | | ⊥ | | ÷ | — | | // |
|---|---|---|---|---|---|---|---|---|---|---|---|---|---|---|---|---|---|---|---|---|---|---|---|
| over 0 to 30 | over 30 to 53 | over 53 to 70 | over 70 to 90 | over 90 to 115 | over 115 to 150 | over 150 to 250 | over 250 to 350 | over 350 to 500 | over 0 to 30 | over 30 to 53 | over 53 to 70 | over 70 to 90 | over 90 to 115 | over 115 to 150 | over 150 to 200 | over 200 to 250 | over 250 to 320 | over 0 to 10 | over 10 | all | over 0 to 100 | over 100 to 150 | over 150 |
| ±0.18 | ?.25 | ±0.30 | ±0.35 | ±0.40 | ?.45 | ±0.60 | ±0.70 | ?.85 | ±0.20 | ±0.25 | ±0.30 | ±0.35 | ±0.44 | ±0.55 | ±0.70 | ±0.80 | ±0.90 | 0.2 | 0.3 | 0.3 | 0.2 | 0.3 | 0.5 |

| ITEM | NAME OF PART | | NO. OF PART | Q"TY | MATERIAL | | | NOTE | |
|---|---|---|---|---|---|---|---|---|---|
| DWG. | ZX | DATE | | SIZE | A4 | UNITS | mm | SHEET/OF | 1 / 1 |
| CHK. | | DATE | | SCALE | 3:1 | | | | |
| APP. | | DATE | | NAME | KSE-500-5.08-XX | | | | |
| | | | | DWGNO. | | | | | |

REV:1.0